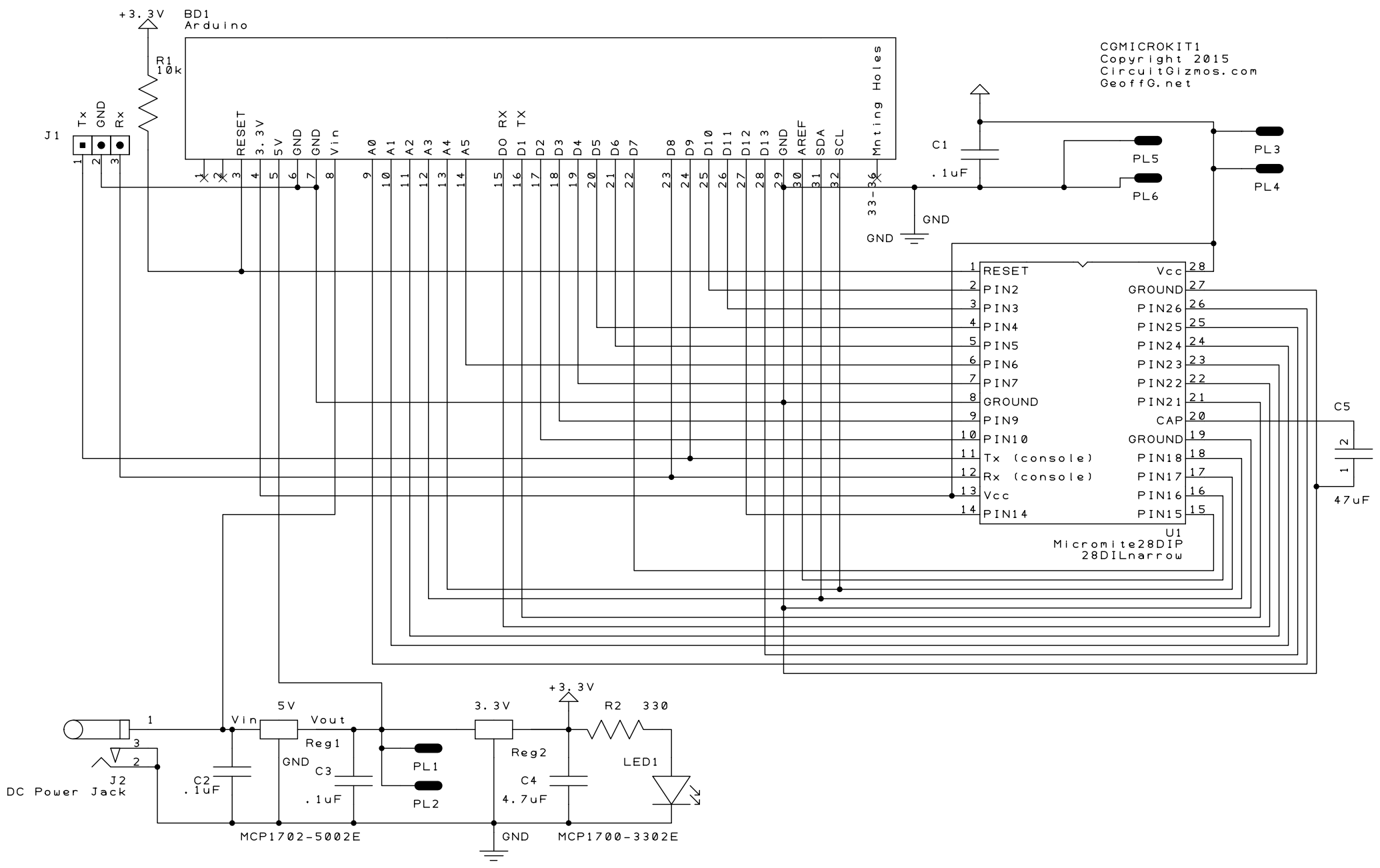
+3.3V
BD1
Arduino
R1
10k
J1
Tx
GND
Rx
RESET
3.3V
5V
GND
GND
Vin
A0
A1
A2
A3
A4
A5
DO RX
D1 TX
D2
D3
D4
D5
D6
D7
D8
D9
D10
D11
D12
D13
GND
AREF
SDA
SCL
Mnting Holes
33-36
GND
CGMICROKIT1
Copyright 2015
CircuitGizmos.com
GeoffG.net
C1
.1uF
PL5
PL6
PL3
PL4
GND
RESET
PIN2
PIN3
PIN4
PIN5
PIN6
PIN7
GROUND
PIN9
PIN10
Tx (console)
Rx (console)
Vcc
PIN14
Vcc
GROUND
PIN26
PIN25
PIN24
PIN23
PIN22
PIN21
CAP
GROUND
PIN18
PIN17
PIN16
PIN15
U1
Micromite28DIP
28DILnarrow
C5
47uF
DC Power Jack
J2
Vin
5V
Vout
Reg1
GND
C2
.1uF
C3
.1uF
PL1
PL2
3.3V
Reg2
C4
4.7uF
+3.3V
R2
330
LED1
MCP1702-5002E
GND
MCP1700-3302E