Standard 1% Resistor Values

10.0	14.7	21.5	31.6	46.4	68.1
10.2	15.0	22.1	32.4	47.5	69.8
10.5	15.4	22.6	33.2	48.7	71.5
10.7	15.8	23.2	34.0	49.9	73.2
11.0	16.2	23.7	34.8	51.1	75.0
11.3	16.5	24.3	35.7	52.3	76.8
11 5	16.9	24.9	36.5	53.6	78.7
11.8	17.4	25.5	37.4	54.9	80.6
12.1	17.8	26.1	38.3	56.2	82.5
12.4	18.2	26.7	39.2	57.6	84.5
12.7	18.7	27.4	40.2	59.0	86.6
13.0	19.1	28.0	41.2	60.4	88.7
13.3	19.6	28.7	42.2	61.9	90.9
13.7	20.0	29.4	43.2	63.4	93.1
14.0	20.5	30.1	44.2	64.9	95.3
14.3	21.0	30.9	45.2	66.5	97.6

Standard Resistance value is obtained from the chart by multiplying by powers of 10.

i.e. 11.3 can be 11.3, 113, 1.13k, 11.3k, 113k, or 1.13meg

5% Resistor Values

10	11	12	13	15	16
18	20	22	24	27	30
33	36	39	43	47	51
56	62	68	76	82	91

Red are 10%
Underline = 20%

www.circuitgizmos.com

Standard 10% Capacitor Values

10pF	100pF	.001µF	.010µF	.10µF	1.0µF	10µF
12pF	120pF	.0012µF	.012µF	.12µF	1.2µF	
15pF	150pF	.0015µF	.015µF	.15µF	1.5µF	
18pF	180pF	.0018µF	.018µF	.18µF	1.8µF	
22pF	220pF	.0022µF	.022µF	.22µF	2.2µF	22µF
27pF	270pF	.0027µF	.027µF	.27µF	2.7µF	
33pF	330pF	.0033µF	.033µF	.33µF	3.3µF	33µF
39pF	390pF	.0039µF	.039µF	.39µF	3.9µF	
47pF	470pF	.0047µF	.047µF	.47µF	4.7µF	47µF
56pF	560pF	.0056µF	.056µF	.56µF	5.6µF	
68pF	680pF	.0068µF	.068µF	.68µF	6.8µF	
82pF	820pF	.0082µF	.082µF	.82µF	8.2µF	

www.circuitgizmos.com

ASCII Table - 0 - 15

Decimal	Hexadecimal	Binary	Character	Notes
0	&h00	&b00000000	**NUL**	Null
1	&h01	&b00000001	**SOH**	Start of heading
2	&h02	&b00000010	**STX**	Start of text
3	&h03	&b00000011	**ETX**	End of text
4	&h04	&b00000100	**EOT**	End of transmission
5	&h05	&b00000101	**ENQ**	Enquiry
6	&h06	&b00000110	**ACK**	Acknowledge
7	&h07	&b00000111	**BEL**	Bell
8	&h08	&b00001000	**BS**	Backspace
9	&h09	&b00001001	**TAB**	Horizontal tab
10	&h0A	&b00001010	**LF**	Line feed
11	&h0B	&b00001011	**VT**	Vertical tab
12	&h0C	&b00001100	**FF**	Form feed
13	&h0D	&b00001101	**CR**	Carriage return
14	&h0E	&b00001110	**SO**	Shift out
15	&h0F	&b00001111	**SI**	Shift in

www.circuitgizmos.com

ASCII Table - 16 - 31

Decimal	Hexadecimal	Binary	Character	Notes
16	&h10	&b00010000	**DLE**	Data link escape
17	&h11	&b00010001	**DC1**	Device control 1
18	&h12	&b00010010	**DC2**	Device control 2
19	&h13	&b00010011	**DC3**	Device control 3
20	&h14	&b00010100	**DC4**	Device control 4
21	&h15	&b00010101	**NAK**	Negative acknowledge
22	&h16	&b00010110	**SYN**	Synchronous idle
23	&h17	&b00010111	**ETB**	End of trans block
24	&h18	&b00011000	**CAN**	Cancel
25	&h19	&b00011001	**EM**	End of medium
26	&h1A	&b00011010	**SUB**	Substitute
27	&h1B	&b00011011	**ESC**	Escape
28	&h1C	&b00011100	**FS**	File separator
29	&h1D	&b00011101	**GS**	Group separator
30	&h1E	&b00011110	**RS**	Record separator
31	&h1F	&b00011111	**US**	Unit separator

www.circuitgizmos.com

ASCII Table - 32 - 47

Decimal	Hexadecimal	Binary	Character	Notes
32	&h20	&b00100000		Space
33	&h21	&b00100001	**!**	Exclamation
34	&h22	&b00100010	**“**	Double quote
35	&h23	&b00100011	**#**	Hash
36	&h24	&b00100100	**$**	Dollar
37	&h25	&b00100101	**%**	Percent
38	&h26	&b00100110	**&**	And, ampersand
39	&h27	&b00100111	**'**	Single quote
40	&h28	&b00101000	**(**	Open parenthesis
41	&h29	&b00101001	**)**	Closed parenthesis
42	&h2A	&b00101010	*****	Asterisk
43	&h2B	&b00101011	**+**	Plus
44	&h2C	&b00101100	**,**	Comma
45	&h2D	&b00101101	**-**	Minus, dash
46	&h2E	&b00101110	**.**	Period
47	&h2F	&b00101111	**/**	Forward slash

www.circuitgizmos.com

ASCII Table - 48 - 63

Decimal	Hexadecimal	Binary	Character	Notes
48	&h30	&b00110000	**0**	Zero
49	&h31	&b00110001	**1**	One
50	&h32	&b00110010	**2**	Two
51	&h33	&b00110011	**3**	Three
52	&h34	&b00110100	**4**	Four
53	&h35	&b00110101	**5**	Five
54	&h36	&b00110110	**6**	Six
55	&h37	&b00110111	**7**	Seven
56	&h38	&b00111000	**8**	Eight
57	&h39	&b00111001	**9**	Nine
58	&h3A	&b00111010	**:**	Colon
59	&h3B	&b00111011	**;**	Semi colon
60	&h3C	&b00111100	**<**	Lesser
61	&h3D	&b00111101	**=**	Equal
62	&h3E	&b00111110	**>**	Greater
63	&h3F	&b00111111	**?**	Question mark

www.circuitgizmos.com

ASCII Table - 64 - 79

Decimal	Hexadecimal	Binary	Character	Notes
64	&h40	&b01000000	@	At symbol (petail)
65	&h41	&b01000001	A	Alpha
66	&h42	&b01000010	B	Bravo
67	&h43	&b01000011	C	Charlie
68	&h44	&b01000100	D	Delta
69	&h45	&b01000101	E	Echo
70	&h46	&b01000110	F	Foxtrot
71	&h47	&b01000111	G	Golf
72	&h48	&b01001000	H	Hotel
73	&h49	&b01001001	I	India
74	&h4A	&b01001010	J	Juliett
75	&h4B	&b01001011	K	Kilo
76	&h4C	&b01001100	L	Lima
77	&h4D	&b01001101	M	Mike
78	&h4E	&b01001110	N	November
79	&h4F	&b01001111	O	Oscar

www.circuitgizmos.com

ASCII Table - 80 - 95

Decimal	Hexadecimal	Binary	Character	Notes
80	&h50	&b01010000	P	Papa
81	&h51	&b01010001	Q	Quebec
82	&h52	&b01010010	R	Romeo
83	&h53	&b01010011	S	Sierra
84	&h54	&b01010100	T	Tango
85	&h55	&b01010101	U	Uniform
86	&h56	&b01010110	V	Victor
87	&h57	&b01010111	W	Whiskey
88	&h58	&b01011000	X	X-ray
89	&h59	&b01011001	Y	Yankee
90	&h5A	&b01011010	Z	Zulu
91	&h5B	&b01011011	[	Opening square bracket
92	&h5C	&b01011100	\	Backslash
93	&h5D	&b01011101	]	Closing square bracket
94	&h5E	&b01011110	^	Caret
95	&h5F	&b01011111	_	Underscore

www.circuitgizmos.com

ASCII Table - 96 - 111

Decimal	Hexadecimal	Binary	Character	Notes
96	&h60	&b01100000	`	Opening single quote
97	&h61	&b01100001	a	Able
98	&h62	&b01100010	b	Baker
99	&h63	&b01100011	c	Charlie
100	&h64	&b01100100	d	Dog
101	&h65	&b01100101	e	Easy
102	&h66	&b01100110	f	Fox
103	&h67	&b01100111	g	George
104	&h68	&b01101000	h	How
105	&h69	&b01101001	i	Item
106	&h6A	&b01101010	j	Jig
107	&h6B	&b01101011	k	King
108	&h6C	&b01101100	l	Love
109	&h6D	&b01101101	m	Mike
110	&h6E	&b01101110	n	Nan
111	&h6F	&b01101111	o	Oboe

www.circuitgizmos.com

ASCII Table - 112 - 127

Decimal	Hexadecimal	Binary	Character	Notes
112	&h70	&b01110000	p	Peter
113	&h71	&b01110001	q	Queen
114	&h72	&b01110010	r	Roger
115	&h73	&b01110011	s	Sugar
116	&h74	&b01110100	t	Tare
117	&h75	&b01110101	u	Uncle
118	&h76	&b01110110	v	Victor
119	&h77	&b01110111	w	William
120	&h78	&b01111000	x	X-ray
121	&h79	&b01111001	y	Yoke
122	&h7A	&b01111010	z	Zebra
123	&h7B	&b01111011	{	Opening curly bracket
124	&h7C	&b01111100	|	Vertical line
125	&h7D	&b01111101	}	Closing curly bracket
126	&h7E	&b01111110	~	Tilde
127	&h7F	&b01111111	DEL	Delete

www.circuitgizmos.com

Wire Table

AWG	Diameter (mil)	Diameter (mm)	Ohm / 1000ft (304.8 m)	Max Amps*
30	10	.254	103.2	.86
28	12.6	.320	64.9	1.4
26	15.9	.403	40.8	2.2
24	20.1	.510	25.7	3.5
22	25.4	.645	16.1	7
20	32	.813	10.2	11
18	40.3	1.02	6.4	16
16	50.8	1.29	4.0	22
14	64.1	1.62	2.53	32
12	80.8	2.05	1.59	41
10	101.9	2.59	.999	55
8	128.5	3.26	.682	73

*Maximum amps for air (not bundle) wiring

www.circuitgizmos.com

SI Prefixes

Prefix	Abbrv	Factor	Prefix	Abbrv	Factor
vendeka-	V	10^{33} - decillion	deci-	d	10^{-1} - tenth
xenna-	X	10^{27} - octillion	centi-	c	10^{-2} - hundredth
yotta-	Y	10^{24} - septillion	milli-	m	10^{-3} - thousandth
zetta-	Z	10^{21} - sextillion	myrio-	mo	10^{-4} - ten thousandth
exa-	E	10^{18} - quintillion	micro	µ	10^{-6} - millionth
peta-	P	10^{15} - quadrillion	nano-	n	10^{-9} - billionth
tera-	T	10^{12} - trillion	pico-	p	10^{-12} - trillionth
giga-	G	10^{9} - billion	femto-	f	10^{-15} - quadrillionth
mega	M	10^{6} - million	atto-	a	10^{-18} - quintillionth
myria-	ma	10^{4} - ten thousand	zepto-	z	10^{-21} - sextillionth
kilo-	k	10^{3} - thousand	yocto-	y	10^{-24} - septillionth
hecto-	h	10^{2} - hundred	xenno-	x	10^{-27} - octillionth
deca-	da (D)	10^{1} - ten	vendeko-	v	10^{-33} - decillionth

www.circuitgizmos.com

28-pin Micromite

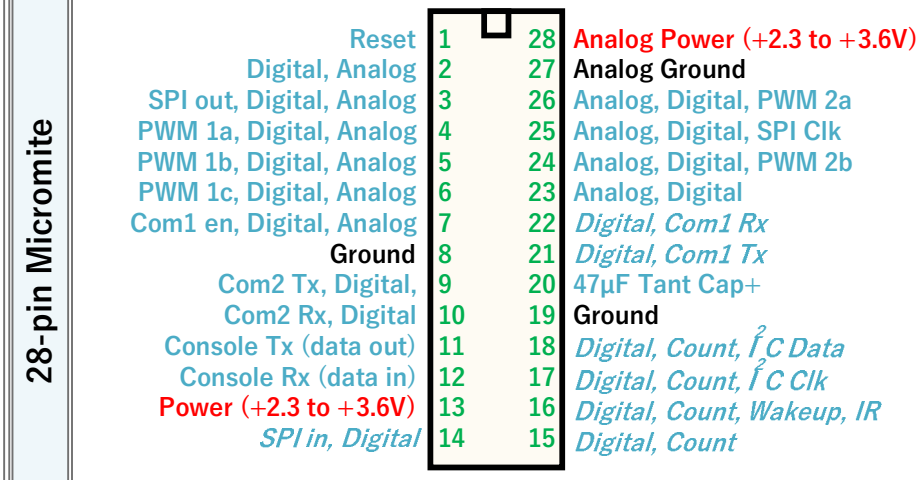

Italic lines are 5V tolerant

www.circuitgizmos.com

44-pin Micromite part A

Pin	Function	Pin	Function
1	*I2C Data, Count, Digital*	12	*Digital*
2	*Digital*	13	*Digital*
3	*Digital*	14	SPI Clk, Digital, Analog
4	*Digital*	15	PWM 2a, Digital, Analog
5	*Digital*	16	Analog Ground
6	Ground	17	Analog Power (+2.3 to 3.6V)
7	47µF Tant Cap+	18	Reset
8	*Com1 Tx, Digital*	19	Digital, Analog
9	*Com1 Rx, Digital*	20	Digital, Analog, SPI out
10	Digital, Analog	21	Digital, Analog, PWM 1a
11	PWM 2b, Digital, Analog	22	Digital, Analog, PWM 1b

Italic lines are 5V tolerant

www.circuitgizmos.com

44-pin Micromite part B

Pin	Function	Pin	Function
23	Digital, Analog, PWM1c	34	Console Rx (data in)
24	Digital, Analog, Com1 en	35	*Digital*
25	Digital, Analog	36	Digital
26	Digital, Analog	37	*Digital*
27	Digital, Analog	38	*Digital*
28	Power (+2.3 to 3.6V)	39	Ground
29	Ground	40	Power (+2.3 to 3.6V)
30	Digital, Com2 Tx	41	*Digital, SPI in*
31	Digital, Com2 Rx	42	*Digital, Count*
32	*Digital*	43	*Digital, Count, Wakeup, IR*
33	Console Tx (data out)	44	*Digital, Count, I2C clk*

Italic lines are 5V tolerant

www.circuitgizmos.com

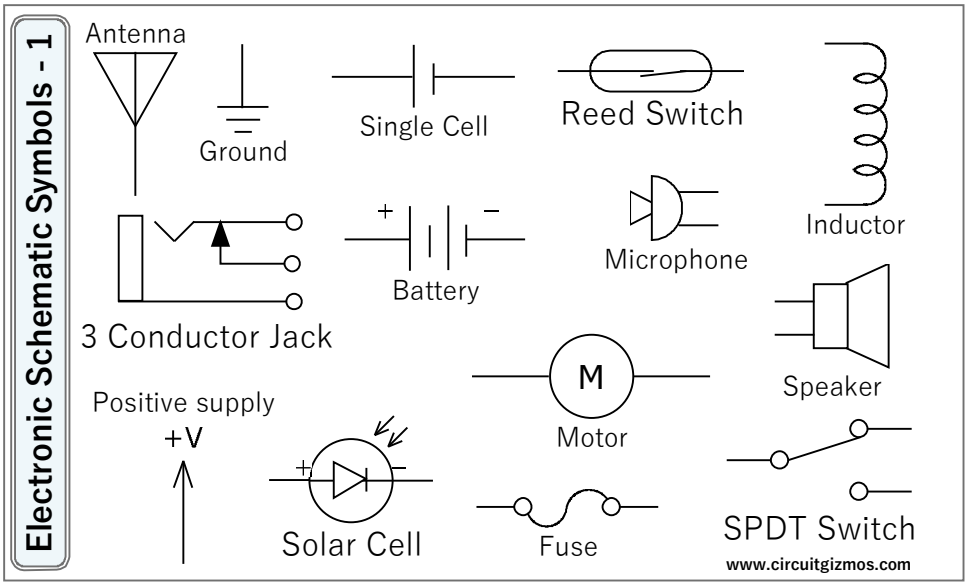
Electronic Schematic Symbols - 1
Antenna
Ground
Single Cell
Reed Switch
Inductor
3 Conductor Jack
Battery
Microphone
Speaker
Positive supply
+V
Motor
M
Solar Cell
Fuse
SPDT Switch
www.circuitgizmos.com

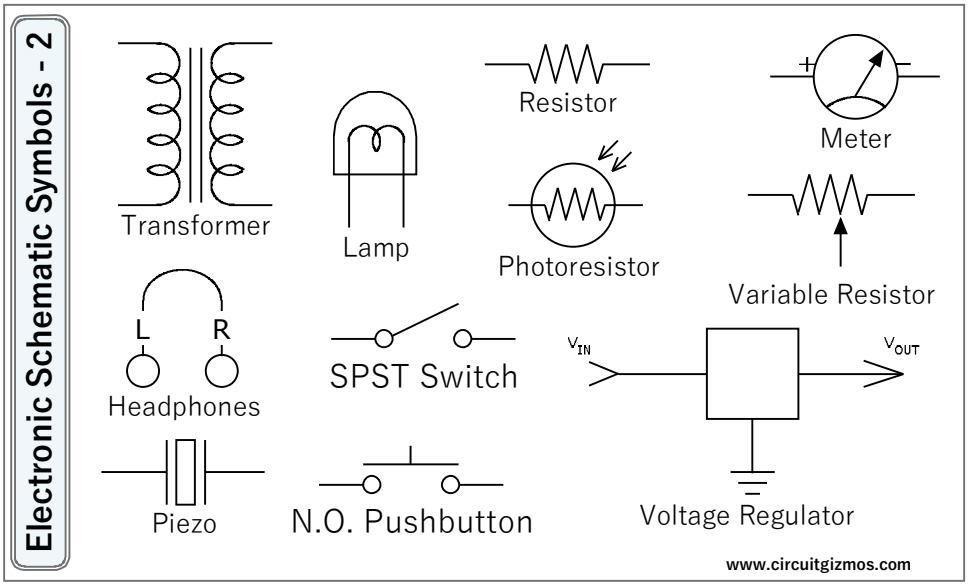
Electronic Schematic Symbols - 2
Transformer
Lamp
Resistor
Meter
Photoresistor
Variable Resistor
L
R
Headphones
SPST Switch
V_{IN}
V_{OUT}
Piezo
N.O. Pushbutton
Voltage Regulator
www.circuitgizmos.com

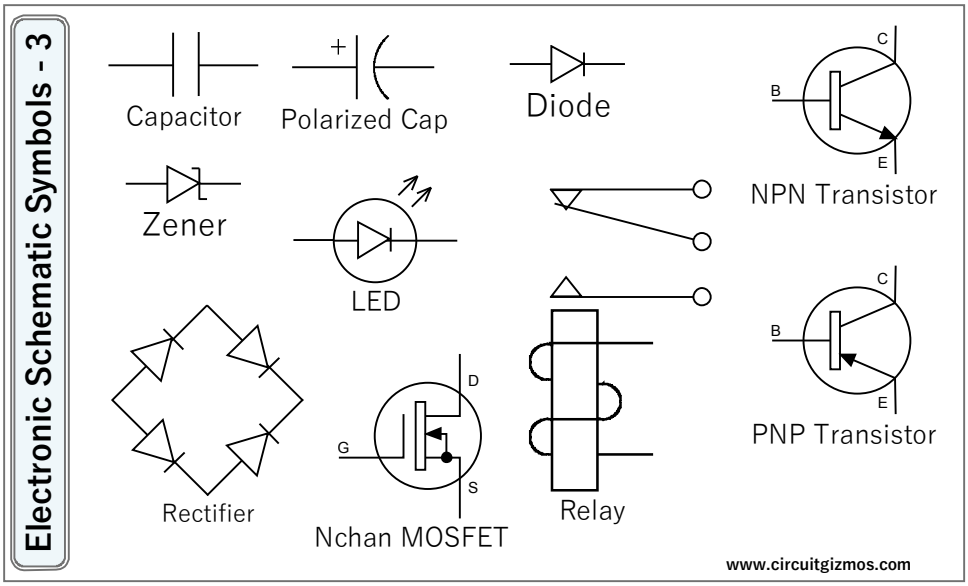
Electronic Schematic Symbols - 3
Capacitor
Polarized Cap
Diode
C
B
E
NPN Transistor
Zener
LED
Rectifier
D
G
S
Nchan MOSFET
Relay
PNP Transistor
www.circuitgizmos.com

Ohm's Law

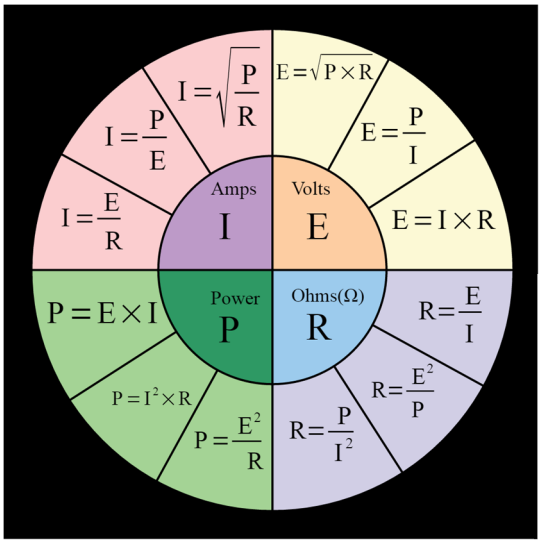

P = Watts
I = Amps
E = Volts
R = Ohms

Ohm's Law Triangle

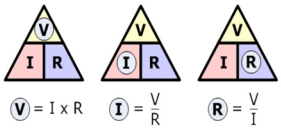

www.circuitgizmos.com

Resistor Color Code

CircuitGizmos *Memorable* Resistor Color Code Chart

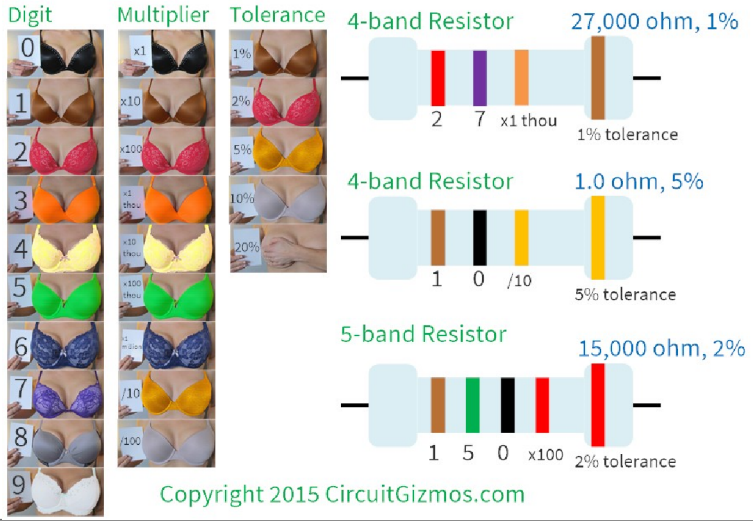

4-band Resistor — 27,000 ohm, 1%

4-band Resistor — 1.0 ohm, 5%

5-band Resistor — 15,000 ohm, 2%

Copyright 2015 CircuitGizmos.com

Engineer's Electronic Component Finger Test

°C = 5/9(°F-32) °F = 9/5(°F) +32 °K =°C + 273.15

Engineer's Finger on Part:	°C	°F
Skin sticks	-20	-4
Cold can of beer	4	40
Barely getting warm	30	86
Finger temperature	37	98.6
Getting warm	40	104
Can hold finger on indefinitely	50	122
Can hold finger on for seconds	60	140
Can hold finger on for 1 second	70	158
Can hold finger on for less than a second	80	176
Need to withdraw finger quickly	90	194
Blisters finger	120	248

Be smart. Use someone else's finger.

www.circuitgizmos.com

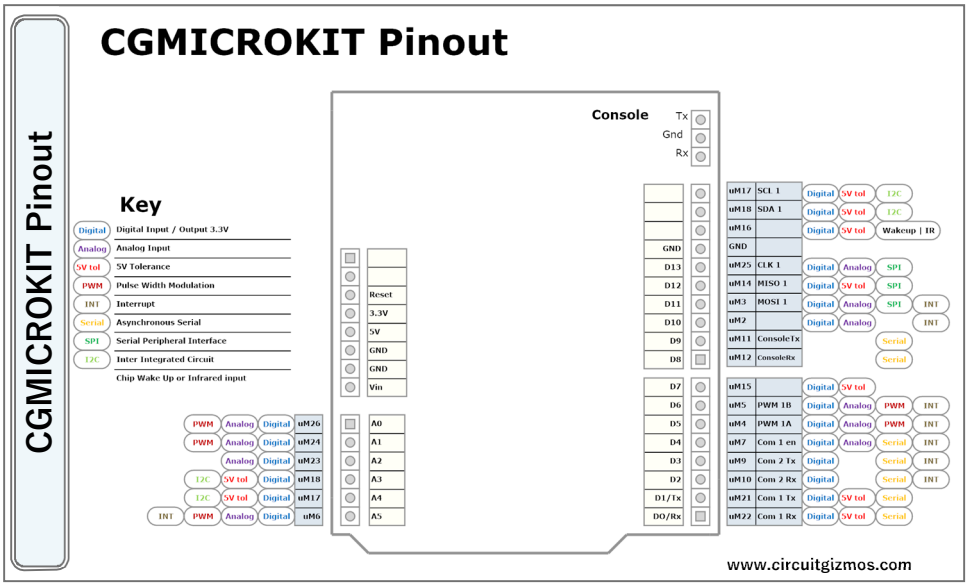
CGMICROKIT Pinout
CGMICROKIT Pinout
Console
Tx
Gnd
Rx
Key
Digital Input / Output 3.3V
Analog Input
5V Tolerance
Pulse Width Modulation
Interrupt
Asynchronous Serial
Serial Peripheral Interface
Inter Integrated Circuit
Chip Wake Up or Infrared input
www.circuitgizmos.com

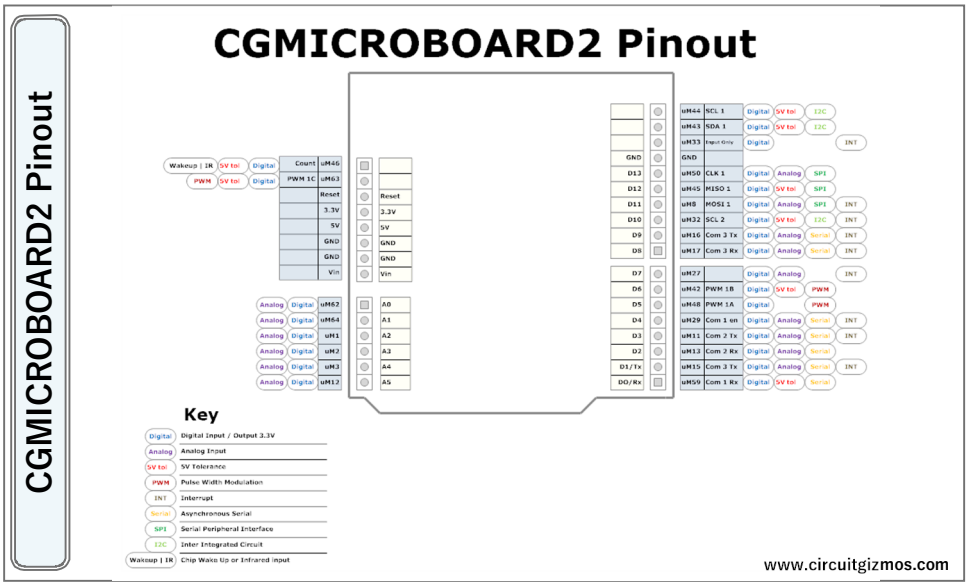
CGMICROBOARD2 Pinout
CGMICROBOARD2 Pinout
Key
Digital Input / Output 3.3V
Analog Input
5V Tolerance
Pulse Width Modulation
Interrupt
Asynchronous Serial
Serial Peripheral Interface
Inter Integrated Circuit
Chip Wake Up or Infrared input
www.circuitgizmos.com

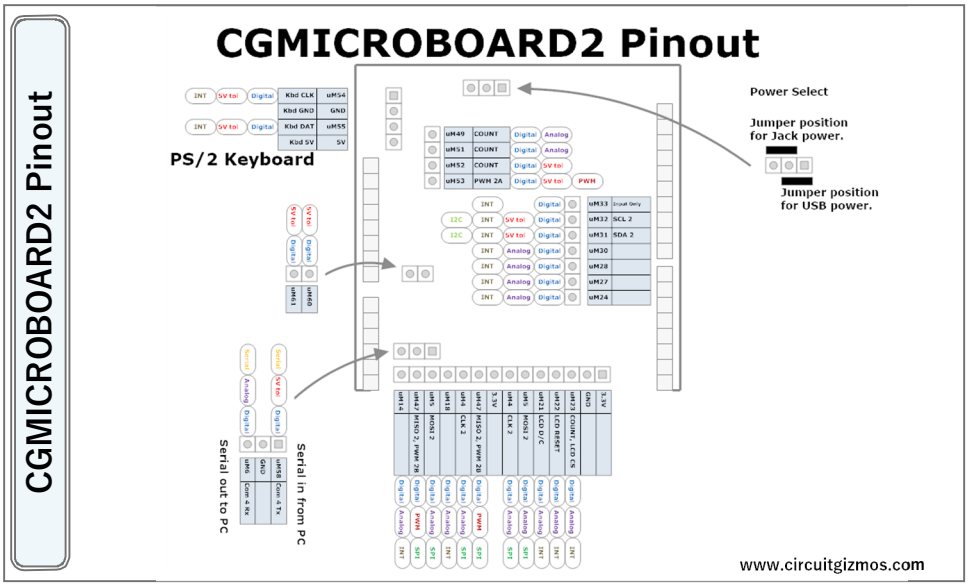
CGMICROBOARD2 Pinout
CGMICROBOARD2 Pinout
PS/2 Keyboard
Power Select
Jumper position for Jack power.
Jumper position for USB power.
Serial out to PC
Serial in from PC
www.circuitgizmos.com

Conversions

From	multiply by:	to
liters	2.1134	pints (liquid)
liters	.9081	quarts (dry)
liters	1.0567	quarts (liquid)
meters	3.2808	feet
meters	.0006214	miles
meters	1.0936	yards
miles	1.6093	kilometers
miles	5280	feet
millimeters	.0394	inches
ounces	.0625	pounds
pounds (avdp)	.4536	kilograms
pounds	16	ounces
quarts (dry)	1.1012	liters
quarts (liquid	.9463	liters
square feet	.0929	square meters
square kilometers	.3861	square miles
square meters	10.7639	square feet
square miles	2.59	square kilometers
square yards	.8361	square meters
watts	3.4121	BTU/hour
watts	.001341	horsepower
yards	.9144	meters
yards	.0005682	miles

www.circuitgizmos.com

Conversions

From	multiply by:	to
centimeters	.3937	inches
centimeters	.03281	feet
cubic feet	.0283	cubic meters
cubic meters	35.3145	cubic feet
cubic meters	1.3079	cubic yards
cubic yards	.7646	cubic meters
degrees	.01745	radians
feet	.3048	meters
feet	.0001894	miles (statute)
feet/second	.6818	miles/hour
gallons (U.S.)	3.7853	liters
grams	.0353	ounces (avdp)
grams	.002205	pounds
horsepower	745.7	watts
horsepower	2547	BTU/hour
hours	.04167	days
inches	25.4	millimeters
inches	2.54	centimeters
kilograms	2.2046	pounds
kilometers	.6214	miles
kilowatt-hour	3412	BTU
liters	.2642	gallons (U.S.)
liters	1.8162	pints (dry)

www.circuitgizmos.com

Morse Code

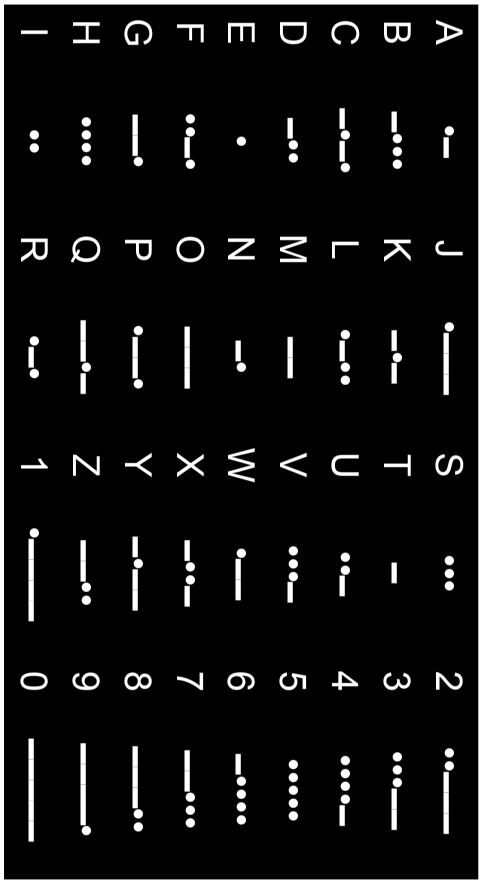

www.circuitgizmos.com